BRASS OIL LEVEL WINDOW TYPE 240/TH - M30 X 1.5

Model: 20495





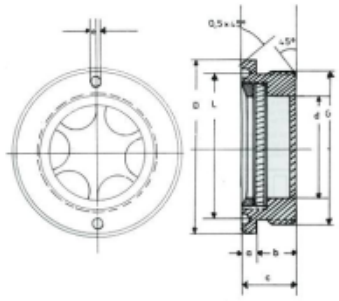

Description

Brass oil window with a round body and natural glass

Properties:

- Brass oil level window with a round body
- Viewing window installed from the front made of natural glass
- Housing and reflector in one piece
- based on DIN 31691 / B
- Heat resistant up to 120 °C
- Seal included

Dimensions:

- D - 36 mm
- d - 20,1 mm
- L - 30,5 mm
- a - 4,5 mm
- b - 8,5 mm
- c - 13 mm
- e - 2,6 mm

Max. Pressure 4 bar

Technical data

Connection	M30 x 1,5

Smeertechniek Rotterdam
Cairostraat 74
3047 BC Rotterdam

T 010 - 466 62 55
F 010 - 466 66 55
E info@smeertechniek.nl
W www.smeertechniek.nl

Scan the QR code to order this product