BRASS OIL LEVEL WINDOW TYPE 240/TH - 1 BSP

Model: 20385



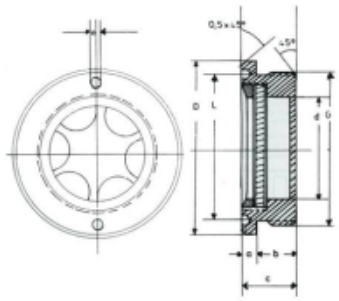



Description

Brass oil eyes with a round body and natural glass

Properties:

- Brass oil level eyes with a round body
- Viewing window installed from the front made of natural glass
- Housing and reflector in one piece
- based on DIN 31691 / B
- Heat resistant up to 120 °C
- Seal included

Dimensions:

- D - 38 mm
- d - 22.1 mm
- L - 33 mm
- a - 4.5 mm
- b - 9 mm
- c - 13.5 mm
- e - 2.6 mm

Max. Pressure 4 bar

General data

Weight (kg)	0.208

Technical data

Connection	G 1

Smeertechniek Rotterdam
Cairostraat 74
3047 BC Rotterdam

T 010 - 466 62 55
F 010 - 466 66 55
E info@smeertechniek.nl
W www.smeertechniek.nl

Scan the QR code to order this product

Material	Brass

Smeertechniek Rotterdam
Cairostraat 74
3047 BC Rotterdam

T 010 - 466 62 55
F 010 - 466 66 55
E info@smeertechniek.nl
W www.smeertechniek.nl

Scan the QR code to order this product