# ALUMINIUM PLUG MET BUITENZESKANT 1.1/2 BSPP

**Model:** 7008-G48

## Omschrijving

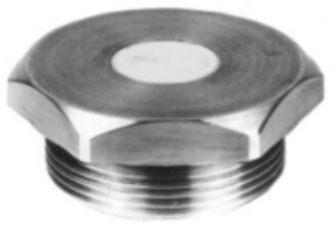

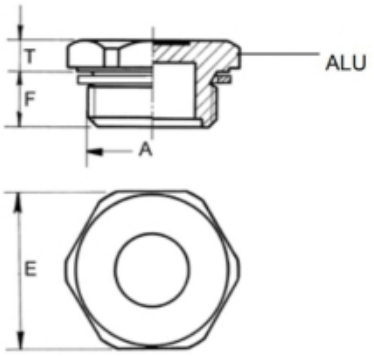


| A BSPP | T | F | E | | | | REF. |
|---|---|---|---|---|---|---|---|
| G1/8 | 5 | 8 | 14 | | | | 7008-G10 |
| G1/4 | 6 | 8 | 17 | | | | 7008-G13 |
| G3/8 | 7 | 10 | 22 | | | | 7008-G17 |
| G1/2 | 7 | 10 | 27 | | | | 7008-G21 |
| G3/4 | 8 | 12 | 32 | | | | 7008-G27 |
| G1 | 8 | 14 | 40 | | | | 7008-G33 |
| G1.1/4 | 10 | 15 | 50 | | | | 7008-G42 |
| G1.1/2 | 10 | 15 | 55 | | | | 7008-G48 |
| G2 | 12 | 17 | 70 | | | | 7008-G60 |

**Smeertechniek Rotterdam**
Cairostraat 74
3047 BC Rotterdam

**T** 010 - 466 62 55
**F** 010 - 466 66 55
**E** info@smeertechniek.nl
**W** www.smeertechniek.nl

Scan de QR code om
dit product te bestellen